TOTO®

LT221

Atherton™ Rectangular Undercounter Lavatory

FEATURES

- 17"x 13"
- Rectangular Undercounter Lavatory
- ADA compliant
- Vitreous china
- Mounting assembly complete with installation template and mounting screw set
- Front overflow

MODELS

- LT221
  (#01)

COLORS/FINISHES

- #01 Cotton

PRODUCT SPECIFICATION

The undercounter lavatory shall be made of vitreous china. Lavatory shall be 17-3/4"in width and 13-3/8" in depth. Product shall be with overflow and lavatory shall include mounting assembly and be ADA compliant. **TOTO Model LT221**_____.

CODES/STANDARDS

- Meets ADA guidelines and ANSI A117.1 requirements when countertop is installed 864mm (34") from finished floor and lavatory is installed 47mm (1 7/8") minimum from front edge.
- Meets and exceeds ASME A112.19.2/CSA B45.1
- Certifications: IAPMO(cUPC), State of Massachusetts, City of Los Angeles, and others

LT221

Atherton™ Rectangular Undercounter Lavatory

SPECIFICATIONS

- **Waste:** 1-1/4" (32 mm)
- **Overall Size:** 21-3/8" (544mm) x 16-3/8" (417mm)
- **Cutout:** 17(432mm) x 12-5/8"(321mm)
- **Basin Depth:** 4″ (103 mm)
- **Basin:** 17-3/4" (452mm) x 13-3/8" (339mm)
- **Warranty:** One Year Limited Warranty
- **Material:** Vitreous china
- **Shipping Weight:** 23lbs (10.4 kg)
- **Shipping Dimensions:** 22-1/4" x 17-3/8" x 7-1/8″

INSTALLATION NOTES

Note: Low flow faucets are recommended.

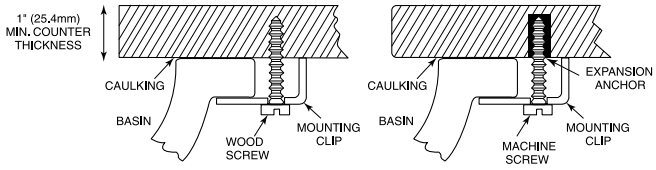

WOOD COUNTER INSTALLATION MARBLE SLAB INSTALLATION

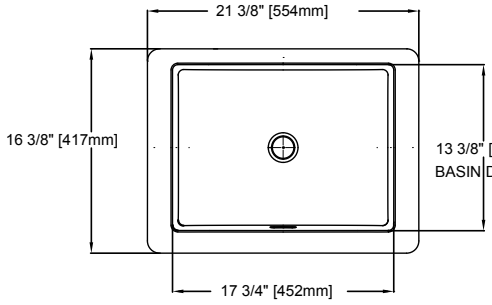

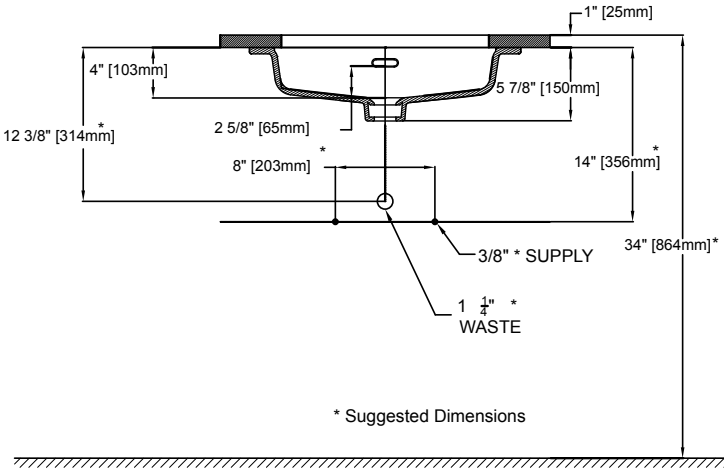

ADA COMPLIANCE CHECK

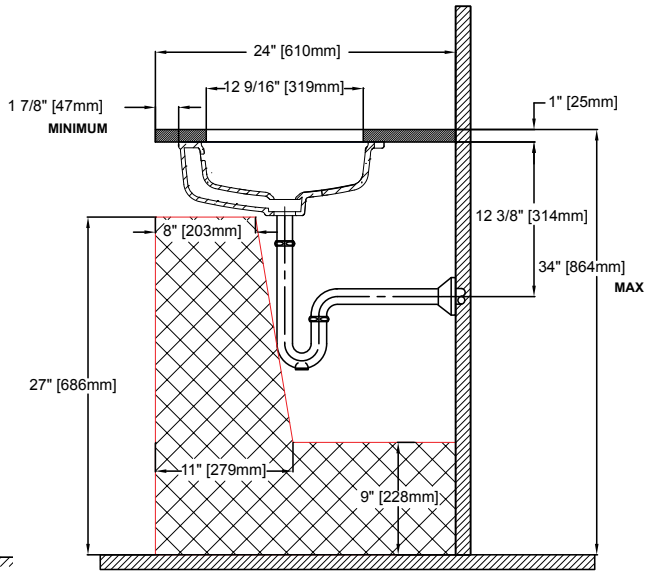

CONCETTO
Lavatory Centerset
S-Size

MODEL # 34270

Pure Freude an Wasser

GROHE

GROHE America, Inc | 200 North Gary Avenue, Suite G, Roselle, IL 60172
Phone: +1 (800) 444-7643 | Fax: +1 (800) 225-2778 | us-customerservice@grohe.com

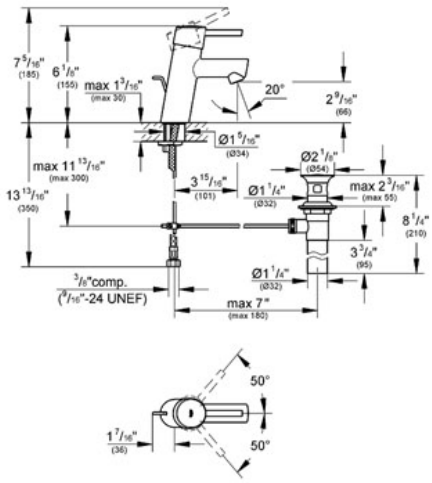

Product Description:
Lavatory Centerset
S-Size

Standard Specification:
- **GROHE StarLight®** finish
- **GROHE SilkMove®** ceramic cartridge
- **GROHE EcoJoy®** technology for less water and perfect flow
- **GROHE QuickFix™** installation system with centering support
- Single hole installation
- Metal lever
- Flow control
- 1 1/4" pop-up waste set
- Stainless Steel Braided Flexible Supplies
- Temperature limiter
- Max Flow Rate 1.5 gpm (5.7 L/min)

Applicable Codes & Standards:
- Energy Policy Act of 1992
- NSF 61
- ASME A112.18.1/CSA B125.1
- US Federal and State material regulations
- EPA WaterSense®
- ICC/ANSI A117.1
- CalGreen

Color:
- ❑ 34270 001 chrome
- ❑ 34270 EN1 Brushed Nickel inf